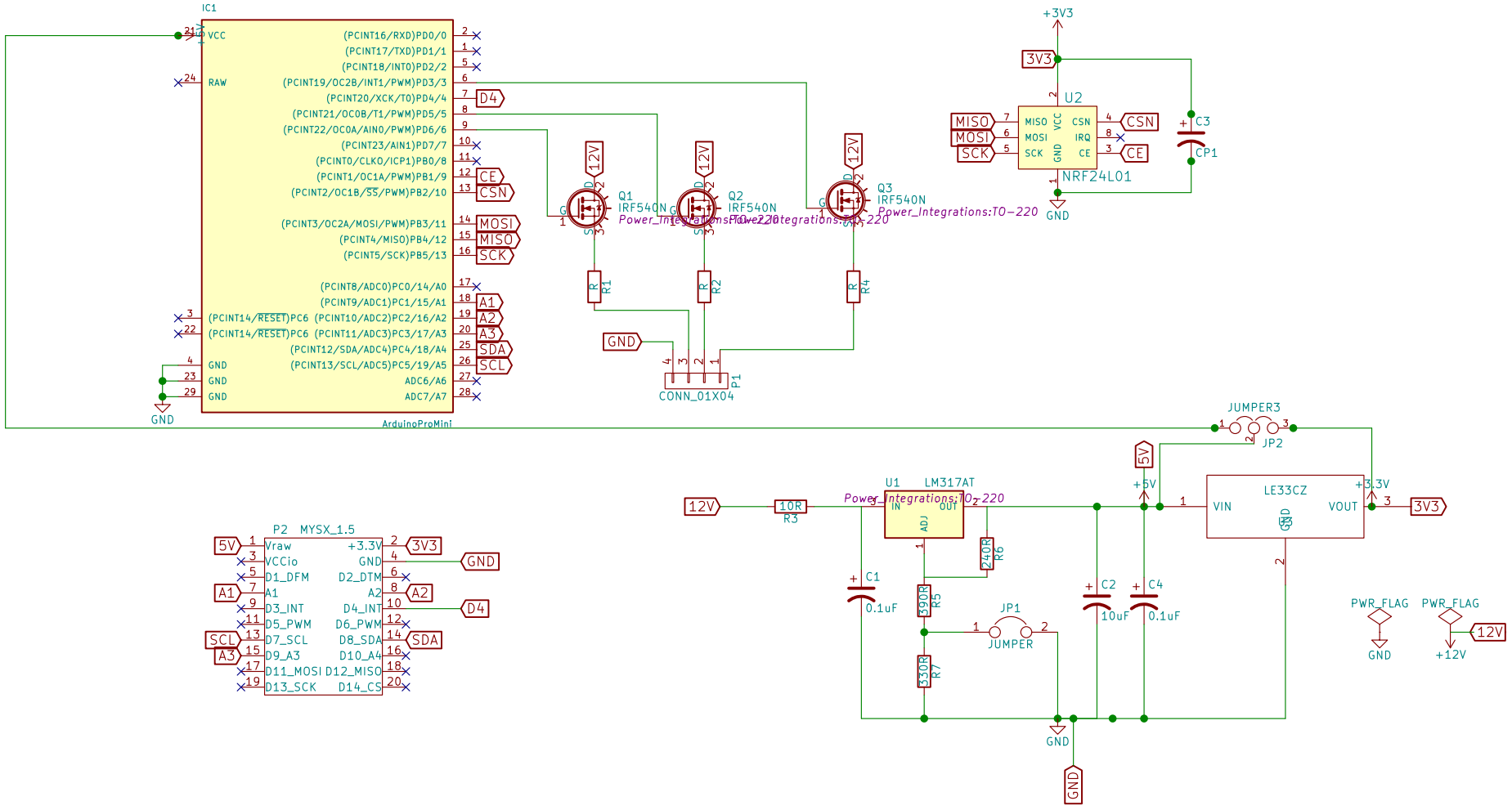

@Activemind

Sheet: 1/1
File: RGB.sch

Title: Yet Another RGB

Size: A4	Date: 06/11/2016	Rev: 0.1
KiCad E.D.A. kicad 4.0.2-stable		Id: 1/1